Alle Rechte vorbehalten/ *All rights reserved*

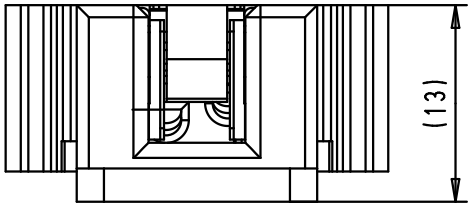

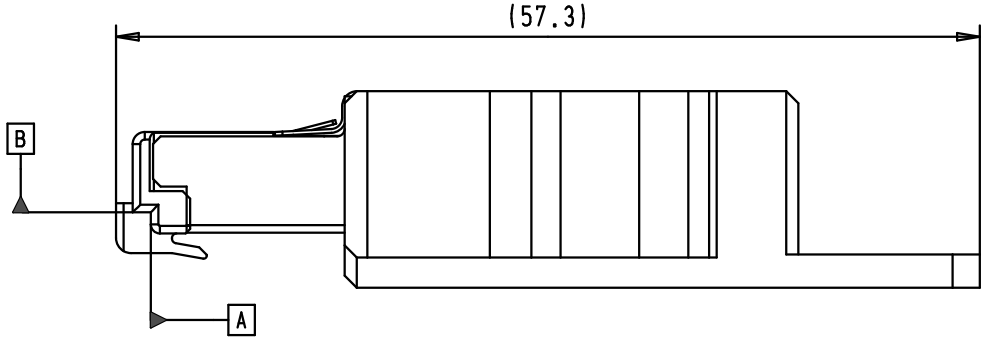

A AND B REFERENCE PLANS ACCORDING TO IEC 606033-7

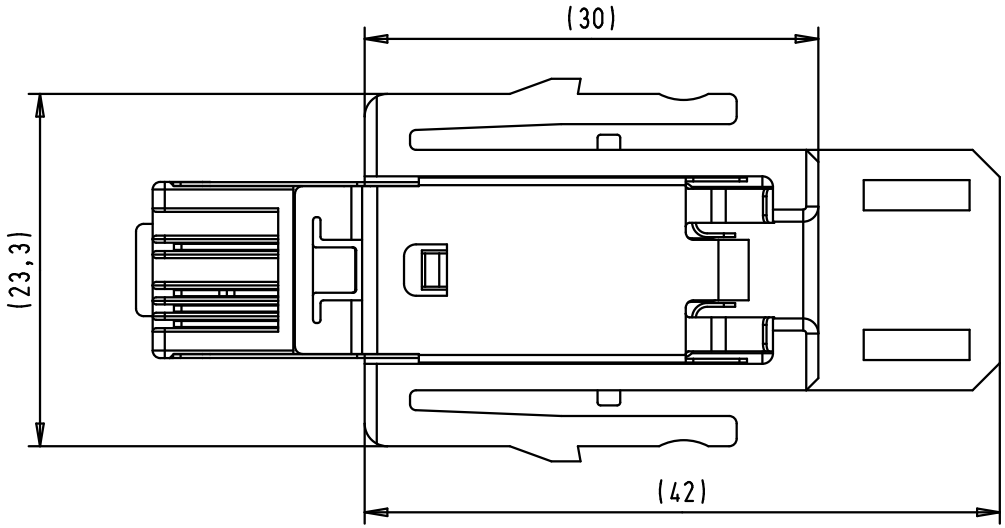

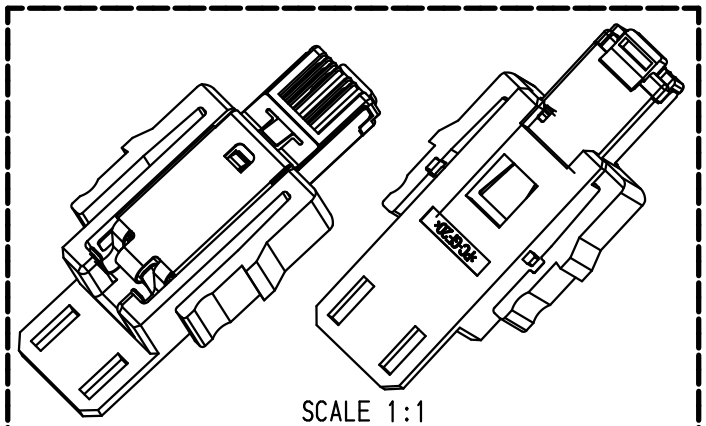

Data contact plating: Au 1.27µm over nickel

09 45 400 1100	Han-Modular RJ45 plug set
09 45 400 1109	Han-Modular RJ45 plug set AWG 26

Mod.	Dat.	Name
36307	08/12/10	AB

	Dat.	Name
Detail.	08/12/10	AB
Insp.		
Stand.		

All Dim. in mm
Orig. Size DIN A 4

HARTING E.U.R.L
F-95972 Paris

Han-Modular RJ45 plug set Cat.5 - 4 poles

TB 09 45 400 110X

Sub.

Maßstab/ *Scale* 2:1

Blatt/ *Page* 1/1